Alpine Ultimate Line
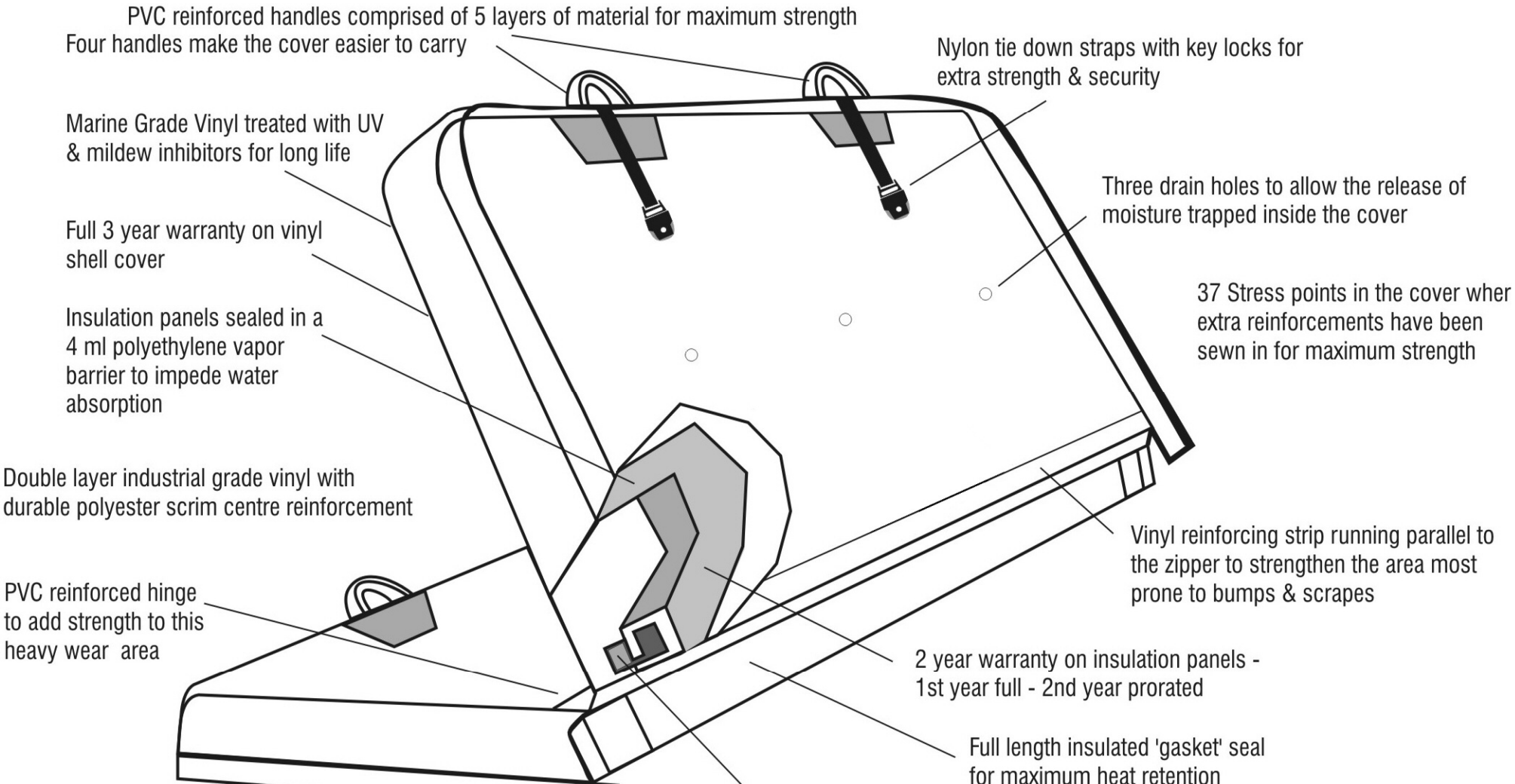
2.0 lb Expanded Polystyrene Insulation
R16 to R21 - Depending on thickness